STANDARD PROCEDURE REMOVAL - INJECTOR CONNECTOR

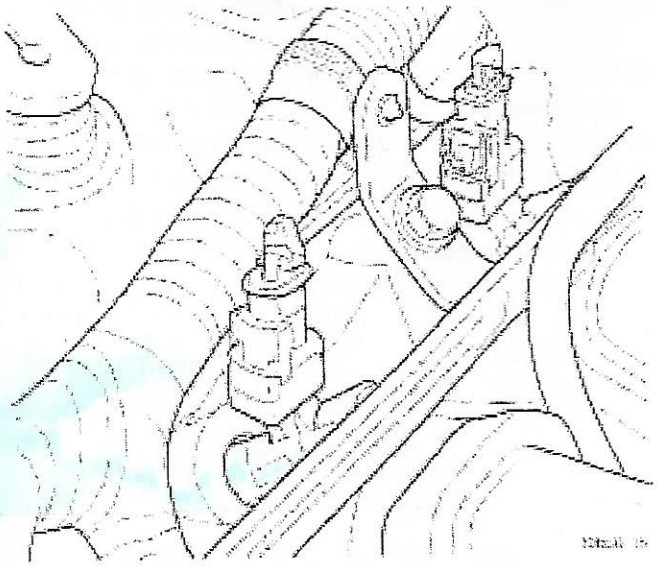

Fig. 6 Fuel Injectors

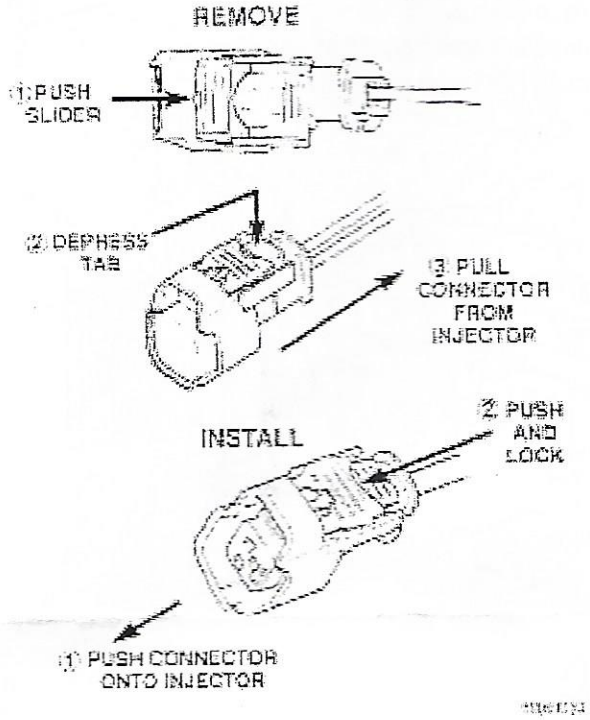

Fig. 7 Remove/Install Injector Connector

REMOVAL

(1) Disconnect negative cable from battery.
(2) Remove fuel rail cover.
(3) Release fuel system pressure. Refer to Fuel System Pressure Release procedure on page 6.
(4) Disconnect fuel supply line from rail (Fig 8). Refer to Quick-Connect Fittings on page 6.
(5) Disconnect electrical connectors at the fuel injectors (Fig. 6). To remove connector refer to (Fig. 7). Pull the red colored slider away from injector (1). While pulling the slider, depress tab (2) and remove connector (3) from injector. The factory fuel injection wiring harness is numerically tagged (INJ 1, INJ 2, etc.) for injector position identification. If harness is not tagged, make note of wiring location before removal.
(6) Remove fuel rail mounting screws.
(7) IMPORTANT: Remove all excess dirt around injector base to intake manifold.
(8) Lift rail off of intake manifold. Cover the fuel injector openings in the intake manifold.
(9) Remove fuel injector retainer (Fig. 9).
(10) Pull injector out of fuel rail.

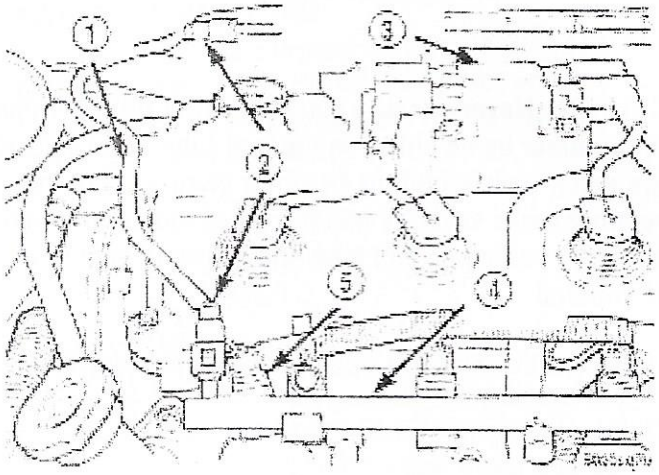

Fig. 8 Fuel Rail and Injectors
1 - FUEL SUPPLY LINE
2 - FUEL LINE QUICK-CONNECTS
3 - IGNITION COIL
4 - FUEL RAIL
5 - FUEL INJECTOR

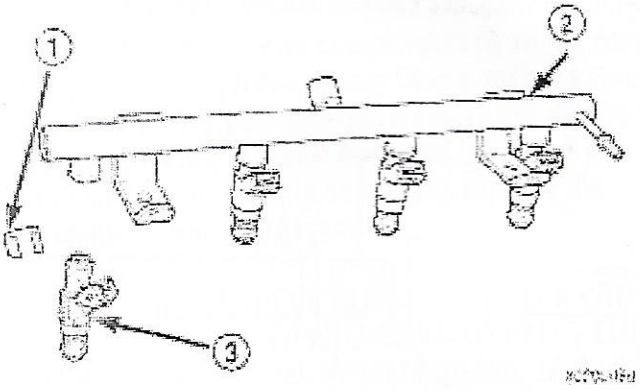

Fig. 9 Fuel Injector Retainer
1 - RETAINER
2 - FUEL RAIL
3 - FUEL INJECTOR

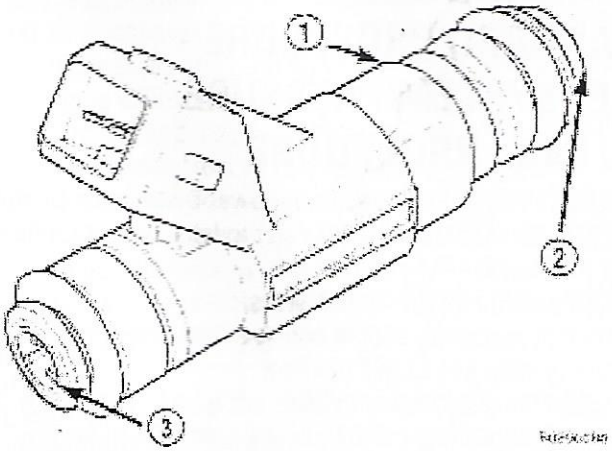

Fig. 10 Fuel Injector O-Rings
1 - FUEL INJECTOR
2 - NOZZLE
3 - TOP (FUEL ENTRY)

INSTALLATION

(1) Apply a light coating of clean engine oil to the upper O-ring (Fig. 10).
(2) Install injector in cup on fuel rail.
(3) Install retaining clip.
(4) Apply a light coating of clean engine oil to the O-ring on the nozzle end of each injector.
(5) Insert fuel injector nozzles into openings in intake manifold. Seat the injectors in place. Tighten fuel rail mounting screws to 22.5 N·m ±3 N·m (200±30 in. lbs.).
(6) Attach electrical connectors to fuel injectors (Fig. 7). Refer to the fuel injector connector section for electrical connector installation.
(7) Connect fuel supply line to fuel rail (Fig. 8). Refer to Quick Connect Fittings on page 6.
(8) Connect negative cable to battery.
(9) **Turn key on and off twice to pressurize the fuel system. Check for leaks prior to starting engine.**

STANDARD PROCEDURE - FUEL SYSTEM PRESSURE RELEASE PROCEDURE

(1) Remove Fuel Pump relay from Power Distribution Center (PDC). For location of relay, refer to label on underside of PDC cover.
(2) Start and run engine until it stalls.
(3) Attempt restarting engine until it will no longer run.
(4) Turn ignition key to OFF position.
(5) Return fuel pump relay to PDC.
(6) One or more Diagnostic Trouble Codes (DTC's) may have been stored in PCM memory due to fuel pump relay removal. The DRB IIIt scan tool must be used to erase a DTC.

WARNING: RELEASE FUEL SYSTEM PRESSURE BEFORE SERVICING FUEL SYSTEM COMPONENTS. SERVICE VEHICLES IN WELL VENTILATED AREAS AND AVOID IGNITION SOURCES. NEVER SMOKE WHILE SERVICING THE VEHICLE.

WARNING: WRAP SHOP TOWELS AROUND HOSES TO CATCH ANY GASOLINE SPILLAGE.

QUICK CONNECT FITTING

STANDARD PROCEDURE - QUICK-CONNECT FITTINGS REMOVAL

When disconnecting a quick-connect fitting, the retainer will remain on the fuel tube nipple.

WARNING: RELEASE FUEL SYSTEM PRESSURE BEFORE DISCONNECTING A QUICK-CONNECT FITTINGS. REFER TO THE FUEL PRESSURE RELEASE PROCEDURE.

(1) Perform Fuel Pressure Release Procedure. Refer to the Fuel Pressure Release Procedure above.
(2) Disconnect negative cable from battery or auxiliary jumper terminal.
(3) Squeeze retainer tabs together and pull fuel tube/quick-connect fitting assembly off of fuel tube nipple. The retainer will remain on fuel tube.

INSTALLATION

CAUTION: Never install a quick-connect fitting without the retainer being either on the fuel tube or already in the quick-connect fitting. In either case, ensure the retainer locks securely into the quick-connect fitting by firmly pulling on fuel tube and fitting to ensure it is secured.

(1) Using a clean lint free cloth, clean the fuel tube nipple and retainer.
(2) Prior to connecting the fitting to the fuel tube, coat the fuel tube nipple with clean engine oil.
(3) Push the quick-connect fitting over the fuel tube until the retainer seats and a click is heard.
(4) The plastic quick-connect fitting has windows in the sides of the casing. When the fitting completely attaches to the fuel tube, the retainer locking ears and the fuel tube shoulder are visible in the windows. If they are not visible, the retainer was not properly installed (Fig. 11). Do not rely upon the audible click to confirm a secure connection.
(5) Connect negative cable to battery.

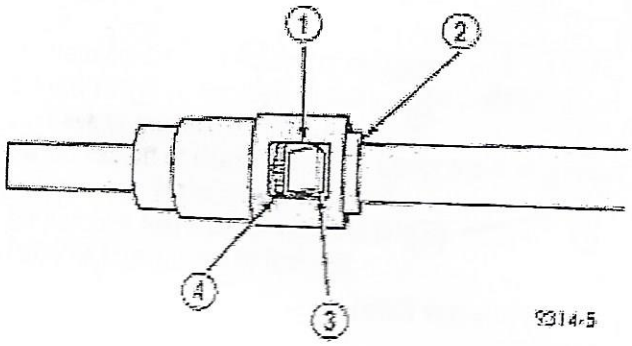

Fig. 11 Plastic Quick-Connect Fitting/Fuel Tube Connection
1 - WINDOW
2 -TAB (2)
3 - EAR
4 - SHOULDER (ON TUBE)

TWO-TAB TYPE FITTING

This type of fitting is equipped with tabs located on both sides of the fitting (Fig. 12). These tabs are supplied for disconnecting the quick-connect fitting from component being serviced.

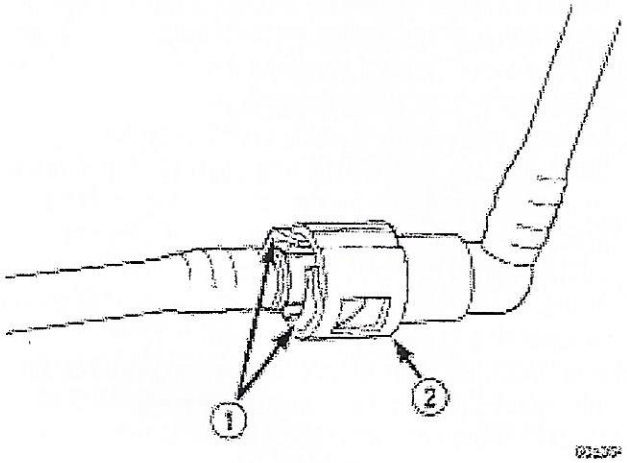

Fig. 12 Typical Two-Tab Type Quick-Connect Fitting
1 - TAB(S)
2 - QUICK-CONNECT FITTING

CAUTION: The interior components (O-rings, spacers) of this type of quick-connect fitting are not serviced separately, but new plastic retainers are available. Do not attempt to repair damaged fittings or fuel lines/tubes. If repair is necessary, replace the complete fuel tube assembly.

WARNING: THE FUEL SYSTEM IS UNDER A CONSTANT PRESSURE (EVEN WITH THE ENGINE OFF). BEFORE SERVICING ANY FUEL SYSTEM HOSES, FITTINGS OR LINES, THE FUEL SYSTEM PRESSURE MUST BE RELEASED. REFER TO THE FUEL PRESSURE RELEASE PROCEDURE IN THIS GROUP.

DISCONNECTION/CONNECTION

(1) Perform fuel pressure release procedure. Refer to Fuel Pressure Release Procedure on page 6.
(2) Disconnect negative battery cable from battery or auxiliary jumper terminal.
(3) Clean fitting of any foreign material before dis-assembly.
(4) To disconnect quick-connect fitting, squeeze plastic retainer tabs (Fig. 12) against sides of quick-connect fitting with your fingers. Tool use is not required for removal and may damage plastic retainer. Pull fitting from fuel system component being serviced. The plastic retainer will remain on component being serviced after fitting is disconnected. The O-rings and spacer will remain in quick-connect fitting connector body.
(5) Inspect quick-connect fitting body and component for damage. Replace as necessary.

CAUTION: When the quick-connect fitting was disconnected, the plastic retainer will remain on the component being serviced. If this retainer must be removed, very carefully release the retainer from the component with two small screwdrivers. After removal, inspect the retainer for cracks or any damage.

(6) Prior to connecting quick-connect fitting to component being serviced, check condition of fitting and component. Clean parts with a lint-free cloth. Lubricate with clean engine oil.
(7) Insert quick-connect fitting to component being serviced and into plastic retainer. When a connection is made, a click will be heard.
(8) Verify a locked condition by firmly pulling on fuel tube and fitting (15-30 lbs.).
(9) Connect negative cable to battery.
(10) Turn key on and off twice to pressurize the fuel system. Check for leaks prior to starting engine.

PLASTIC RETAINER RING TYPE FITTING

This type of fitting can be identified by the use of a full-round plastic retainer ring (Fig. 13) usually black in color.

CAUTION: The interior components (O-rings, spacers, retainers) of this type of quick-connect fitting are not serviced separately. Do not attempt to repair damaged fittings or fuel lines/tubes. If repair is necessary, replace the complete fuel tube assembly.

WARNING: THE FUEL SYSTEM IS UNDER A CONSTANT PRESSURE (EVEN WITH THE ENGINE OFF). BEFORE SERVICING ANY FUEL SYSTEM HOSES, FITTINGS OR LINES, THE FUEL SYSTEM PRESSURE MUST BE RELEASED. REFER TO THE FUEL SYSTEM PRESSURE RELEASE PROCEDURE IN THIS GROUP.

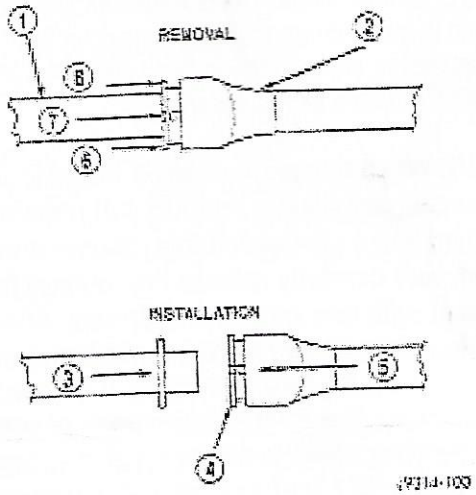

Fig. 13 Plastic Retainer Ring Type Fitting

1 - FUEL TUBE
2 - QUICK CONNECT FITTING
3 - PUSH
4 - PLASTIC RETAINER
5 - PUSH
6 - PUSH
7 - PUSH
8 - PUSH

DISCONNECTION/CONNECTION

(1) Perform fuel pressure release procedure. Refer to Fuel Pressure Release Procedure in this section.
(2) Disconnect negative battery cable from battery or auxiliary jumper terminal.
(3) Clean fitting of any foreign material before dis-assembly.
(4) To release fuel system component from quick-connect fitting, firmly push fitting towards component being serviced while firmly pushing plastic retainer ring into fitting (Fig. 13). With plastic ring depressed, pull fitting from component. The plastic retainer ring must be pressed squarely into fitting body. If this retainer is cocked during removal, it may be difficult to disconnect fitting. Use an open-end wrench on shoulder of plastic retainer ring to aid in disconnection.
(5) After disconnection, plastic retainer ring will remain with quick-connect fitting connector body.
(6) Inspect fitting connector body, plastic retainer ring and fuel system component for damage. Replace as necessary.
(7) Prior to connecting quick-connect fitting to component being serviced, check condition of fitting and component. Clean parts with a lint-free cloth. Lubricate with clean engine oil.
(8) Insert quick-connect fitting into component being serviced until a click is felt.
(9) Verify a locked condition by firmly pulling on fuel tube and fitting (15-30 lbs.).
(10) Connect negative cable to battery.
(11) Turn key on and off twice to pressurize the fuel system. Check for leaks prior to starting engine.